DWG NO. DSP-3213M01

MODEL : DSP 3x2-13

-

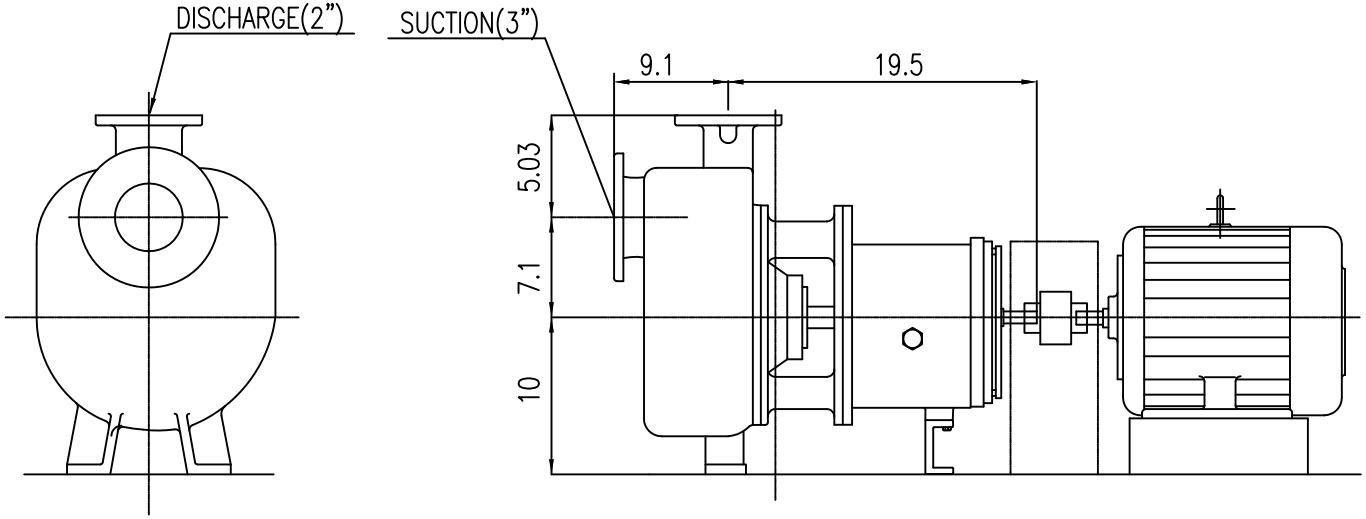

NOZZLE	
SUCTION 3"	DISCHARGE 2"
ANSI #150 R.F	ANSI #150 R.F

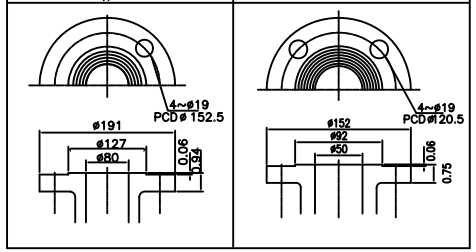

SPECIFICATION

CAPACITY	–	GPM
HEAD	–	ft

WEIGHTS(lbs)

PUMP	331
TOTAL	331

JEON	MIN	MIN	MIN	–	REV. 0
–	–	–	–		
DWN	DSND	CHKD	APPD	DESCRIPTION	

SCALE N/S	CUSTOMER -	SET
GROUP NO.	ITEM NO. -	DWG NO.
REF NO.	OUTLINE DRAWING	DSP-3213M01

TRUFLO A NEW VISION FOR QUALITY PUMPS