MAP-4313M01

MODEL : MAP 4x3-13

-

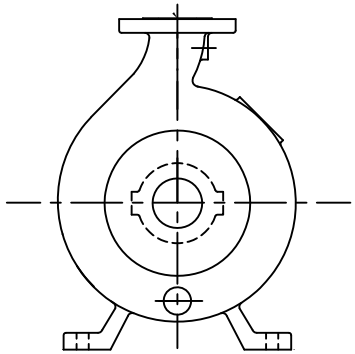

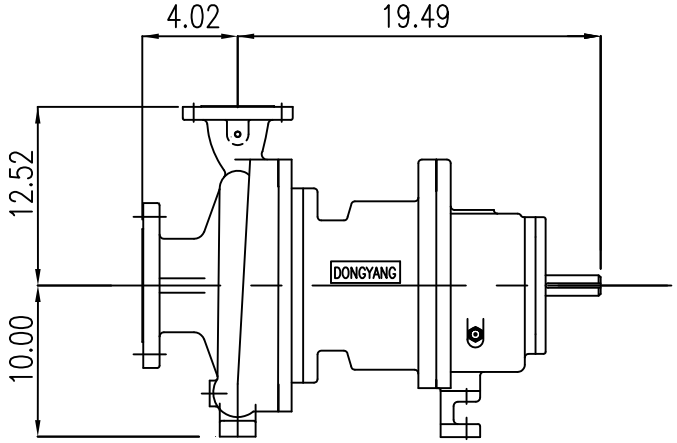

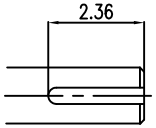

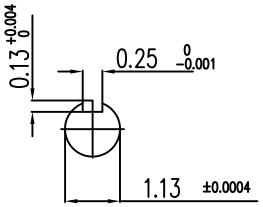

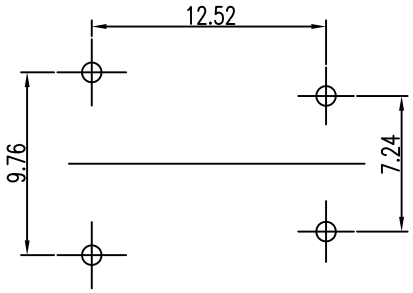

NOZZLE	
SUCTION 4"	DISCHARGE 3"
ANSI #150 R.F	ANSI #150 R.F

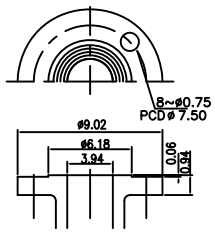

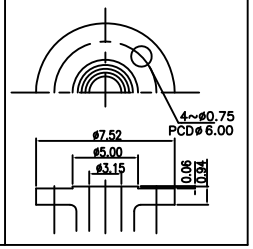

SPECIFICATION

CAPACITY	-	GPM
HEAD	-	ft

WEIGHTS(lbs)

PUMP	330.7
TOTAL	330.7

NOZZLE LOADINGS

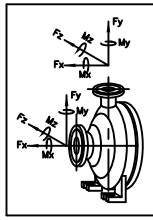

		Suction	Discharge
lbs	Fx	205.0	121.3
lbs	Fy	370.4	429.9
lbs	Fz	390.2	244.7
ft-lbs	Mx	795.6	571.4
ft-lbs	My	528.0	376.1
ft-lbs	Mz	455.7	325.5

JEON	MIN	MIN	MIN	-	REV. 0
-	-	-	-		
DWN	DSND	CHKD	APPD	DESCRIPTION	

SCALE N/S

CUSTOMER -

QTY -

GROUP NO.

ITEM NO. -
(- PUMP)

DWG NO.

REF NO.

PUMP OUTLINE DRAWING

MAP-4313M01

TRUFLO A NEW VISION FOR QUALITY PUMPS